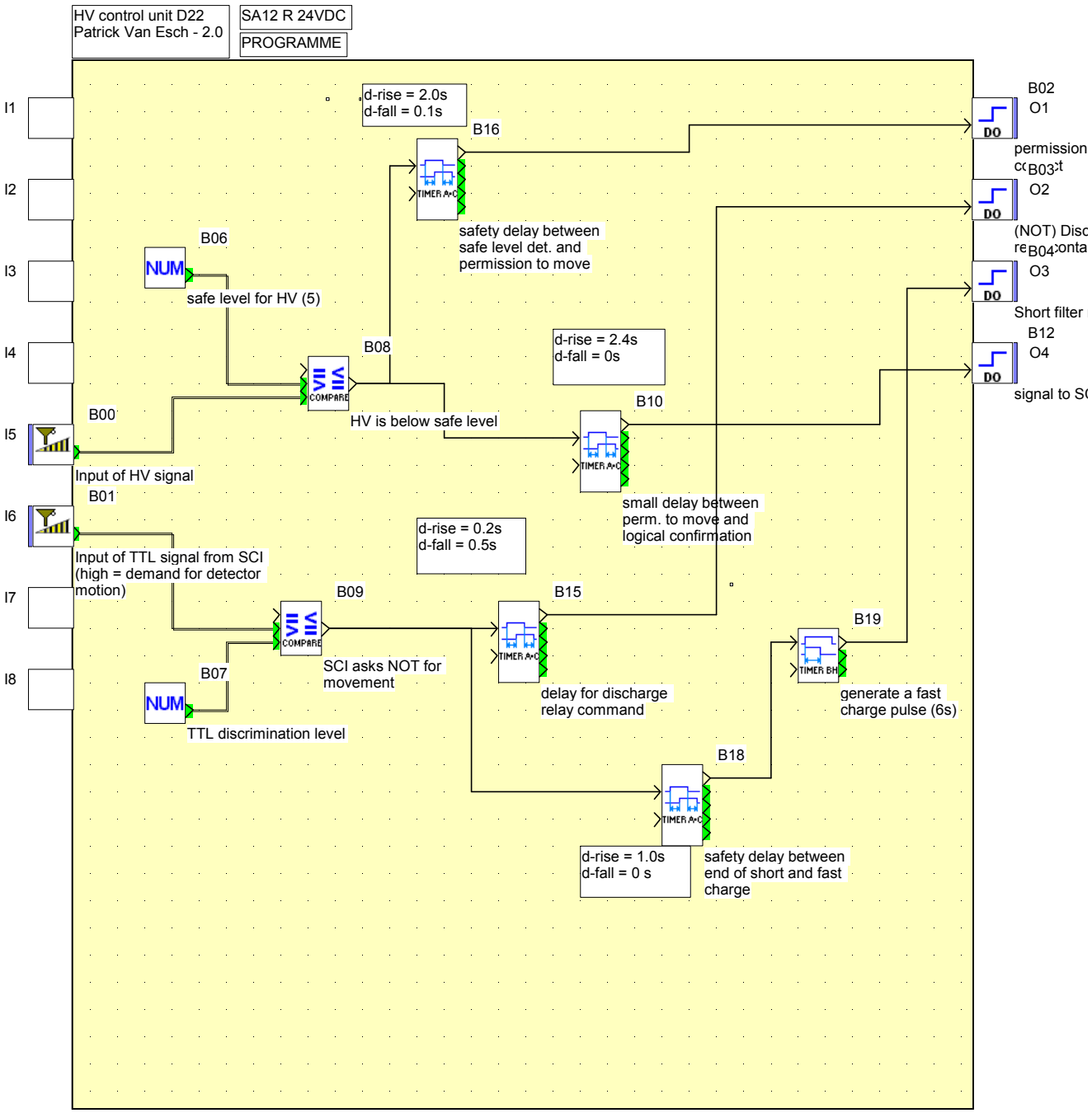
HV control unit D22
Patrick Van Esch - 2.0
SA12 R 24VDC
PROGRAMME
I1
I2
I3
I4
I5
I6
I7
I8
d-rise = 2.0s
d-fall = 0.1s
B16
safety delay between
safe level det. and
permission to move
B06
safe level for HV (5)
B08
HV is below safe level
d-rise = 2.4s
d-fall = 0s
B10
small delay between
perm. to move and
logical confirmation
B00
Input of HV signal
B01
Input of TTL signal from SCI
(high = demand for detector
motion)
d-rise = 0.2s
d-fall = 0.5s
B09
SCI asks NOT for
movement
B07
TTL discrimination level
B15
delay for discharge
relay command
B19
generate a fast
charge pulse (6s)
B18
d-rise = 1.0s
d-fall = 0 s
safety delay between
end of short and fast
charge
B02
O1
permission
B03
O2
(NOT) Disc
B04
O3
Short filter
B12
O4
signal to S